REV	MODIFICATION	DATE	DRAW
B	EN-12-0410	2012/04/13	Chris
C	EN-12-0625	2012/06/22	Chris
D	ECN2-00000496	2017.04.12	Moya

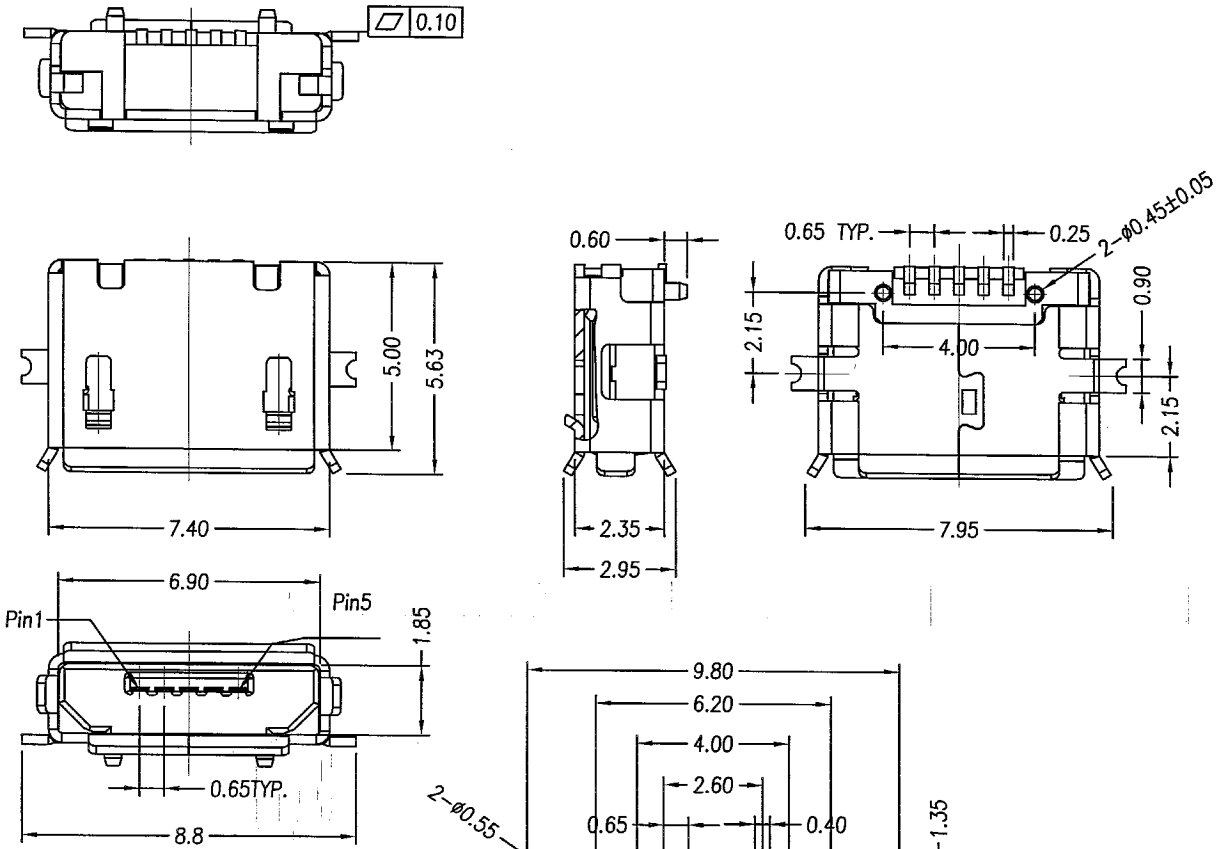

P.C.B LAYOUT
TOP VIEW ±0.05

KING FONT 金峰精密 APR 12 2017 ISSUE R&D Dept.

MATERIALS

HOUSING: HI-TEMP. PLASTIC (UL 94V-0)
SHELL: COPPER ALLOY, NICKEL PLATING
TERMINAL: COPPER ALLOY, GOLD PLATED

SPECIFICATION

CURRENT RATING: 1.8 AMP MAX (ONLY PIN 1, 5)
, OTHER 1 AMP MAX
DIELECTRIC WITHSTANDING: 100V AC FOR ONE MINUTE
CONTACT RESISTANCE: 30m OHMS MAX
INSULATION RESISTANCE: 100M OHMS MIN AT DC 500V
OPERATION TEMPERATURE: -25°C ~ +85°C

ORDER INFORMATION

USBTH-105 01 B20 1 - G

PLATING
01:GOLD FLASH

1:TAPE&REEL

DIMENSION IN mm [Inch]		PROD. SPEC.	KINGFONT PRECISION INDUSTRIAL CO., LTD.
TOLERANCE UNLESS OTHERWISE SPECIFIED		PKG. SPEC.	TITLE MICRO USB AB TYPE, PCB MOUNT, SMT, SHIELD, FEMALE, WITH POST — CUSTOMER DRAWING
.X± 0.30	X.°± 3°	APPROVE	FILE NO. — DWG NO. USBTH-10501B201-G
.XX± 0.20	.X°± 3°	CHECK	
.XXX± 0.10	.XX°± 3°	DRAW	SIZE A4 — PROJ. — SHEET 1/1 — SCALE 5:1 — REV D

QR-2100-043